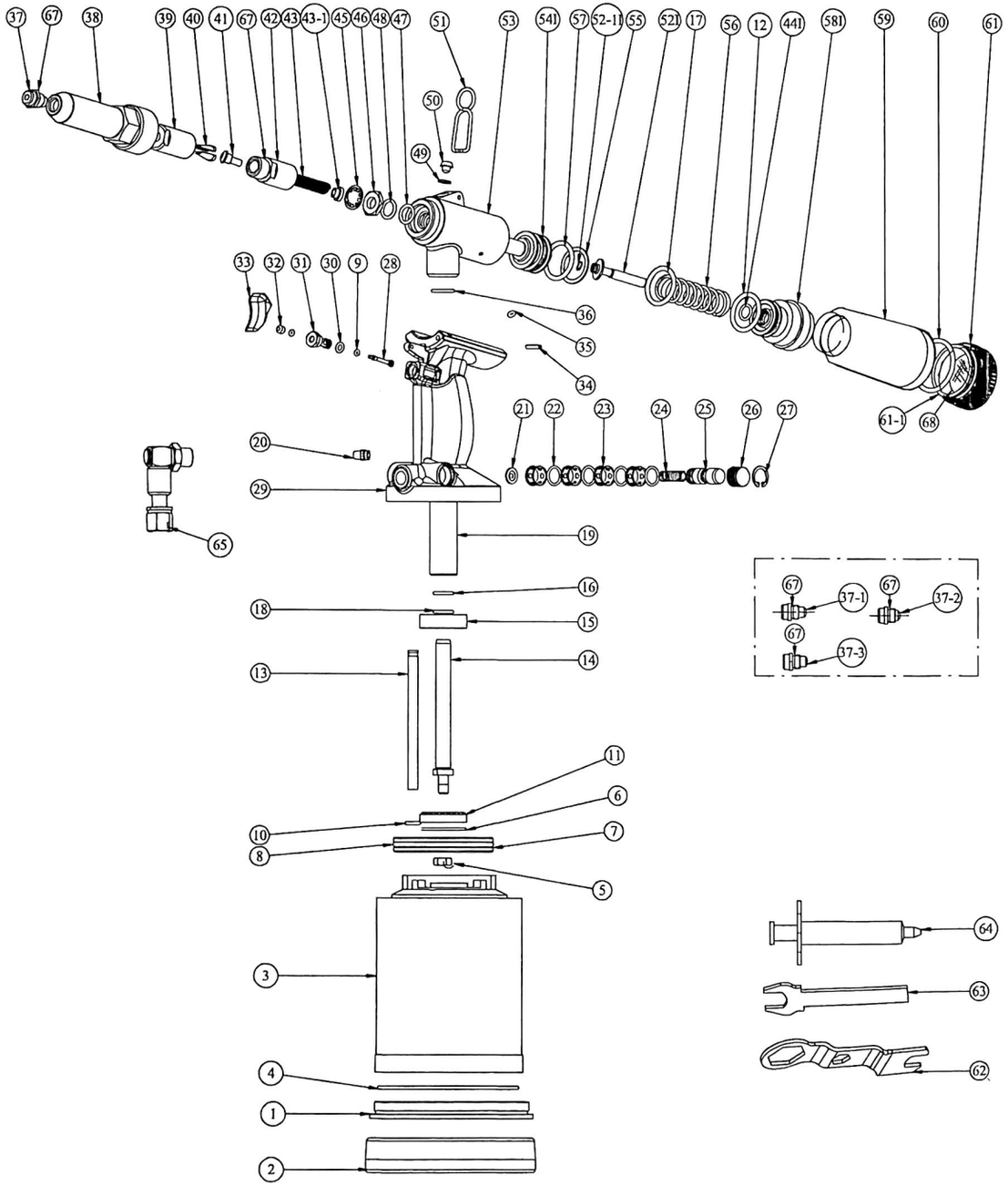

Part List for FP51631CVK Tool

Part No.	Part Name	Q'ty
1	Cylinder CAP	1
2	RUBBER BOTTOM	1
3	AIR CYLINDER BODY	1
4	ORING	1
5	NUT	1
6	WASHER	1
7	AIR PISTON	1
8	ORING	1
9	ORING	2
10	ORING	1
11	Crash Washer	1
12	ORING	1
13	TUBE	1
14	ROD	1
15	STEM NUT	1
16	SEAL	1
17	ORING	1
18	WEAR RING	1
19	STEM	1
20	MUFFLER	1
21	PAD	1
22	ORING	4
23	CAGE	4
24	SPRING	1
25	VALVE	1
26	VALVE CAP	1
27	RETAINING RING	1
28	VALVE PISTON	1
29	HANDLE BODY	1
30	ORING	1
31	TRIGGER INSERT	1
32	TRIGGER HEAD	1
33	TRIGGER	1
34	SPRING PIN	1
35	ORING	1
36	ORING	1

Part No.	Part Name	Q'ty
37	NOSEPIECE (1/4")Ø6.4	1
37-1	NOSEPIECE(7/32")Ø5.6	1
37-2	NOSEPIECE(3/16")Ø4.8	1
37-3	NOSEPIECE(5/16")Ø7.8	1
38	FRAME HEAD	1
39	JAW HOUSING	1
40	JAW FOR(1/4", 7/32", 3/16")	3
41	JAW PUSHER for 3/16"~5/16" (max.mandrel diameter 4.5mm)	1
42	JAW HOUSING COUPLER	1
43	SPRING	1
43-1	SPRING COLLAR	1
44I	ORING	1
45	CASE WASHER	1
46	CASE LOCK NUT	1
47	SEAL	1
48	ORING	1
49	OIL SEAL WASHER	1
50	HEXAGON SOCKET SCREW	1
51	HOOK	1
52I	Rod rear axle	1
52-1I	ORING	1
53	OIL CYLINDER BODY	1
54I	PISTON ROD II	1
55	BACK-UP RING	1
56	SPRING	1
57	ORING	1
58I	FRAME CAP NUT	1
59	SPENT MANDREL BOTTLE	1
60	ORING	1
61	MANDREL BOTTLE ADAPTER	1
61-1	SILENCER	1
62	SPANNER	1
63	SPANNER GAUGE	1
64	OIL CAN	1
65	SHOUTOFF VALVE	1
67	ORING	5
68	CUSHION	1